✳ REVISIONS				
LTR	DESCRIPTION	DATE	REVISED	APPROVED

* RoHS COMPLIANT *

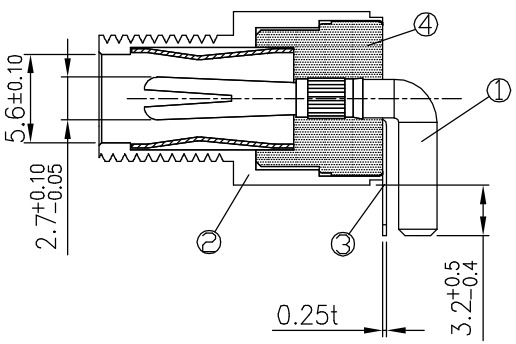

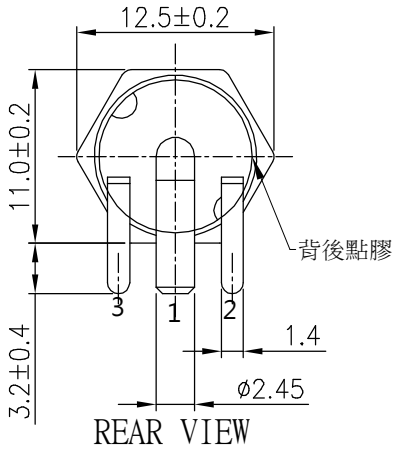

1.Dielectric strength: AC 500V/1 minute
2.Insulation resistance : 100MΩ or over. (DC 500V)
3.Contact resistance : 30mΩ or less

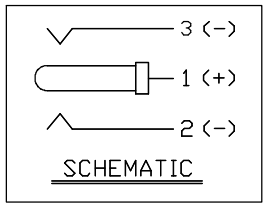

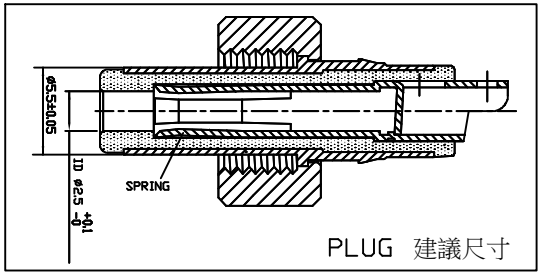

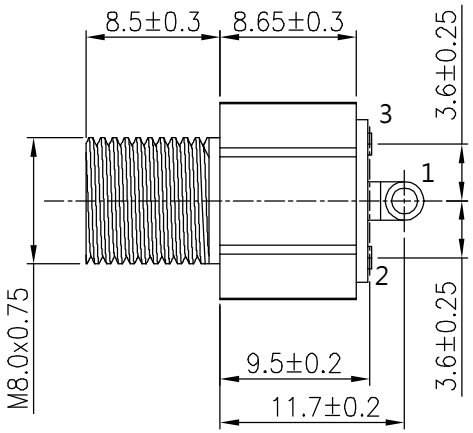

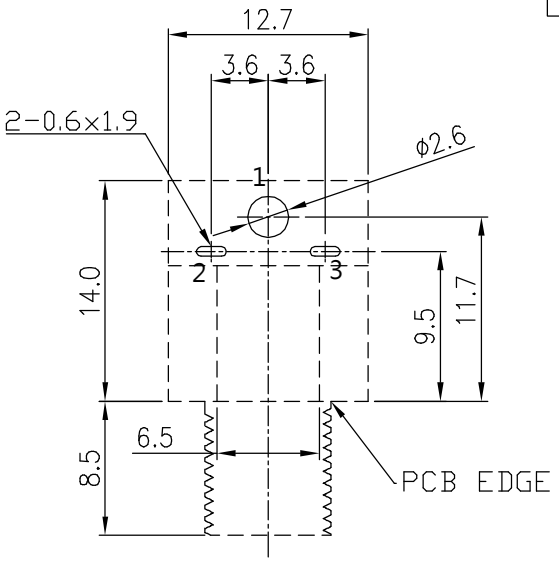

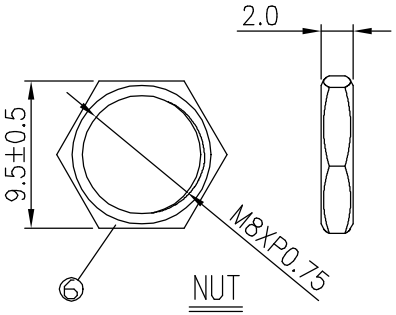

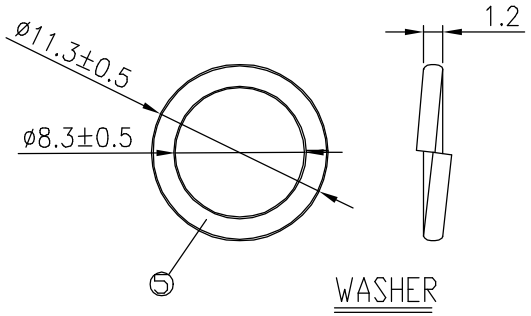

LTR	PART NAME	QTY	MATERIAL	REMARK
6	NUT	1	COPPER ALLOY	Cu/Sn PLATED
5	WASHER	1	COPPER ALLOY	Cu/Sn PLATED
4	DIELECTRIC	1	PBT	BLACK
3	TERMINAL	1	C5191	Ag PLATED
2	SLEEVE	1	COPPER ALLOY	Cu/Sn PLATED
1	PIN	1	Phosphor Bronze	Ag PLATED

UNLESS OTHERWISE SPECIFED TOLERANCES

DECIMALS:	ANGLES:
X ± 0.3	X ± 1°
X.X ± 0.2	X.X ± 0.5°
X.XX ± 0.1	
X.XXX ± 0.05	

DWN	LILY	DATE	2023.03.07	3RD ANGLE PROJECTION	NAME DC POWER JACK
CHKD	ANDY	DATE	2023.03.07		CAT. NO. DCD-020-105J3BP
APVD	JON	DATE	2023.03.07	UNIT: mm	

JKCR Electronics Co., Ltd.

DWN.NO. B-020-105 001